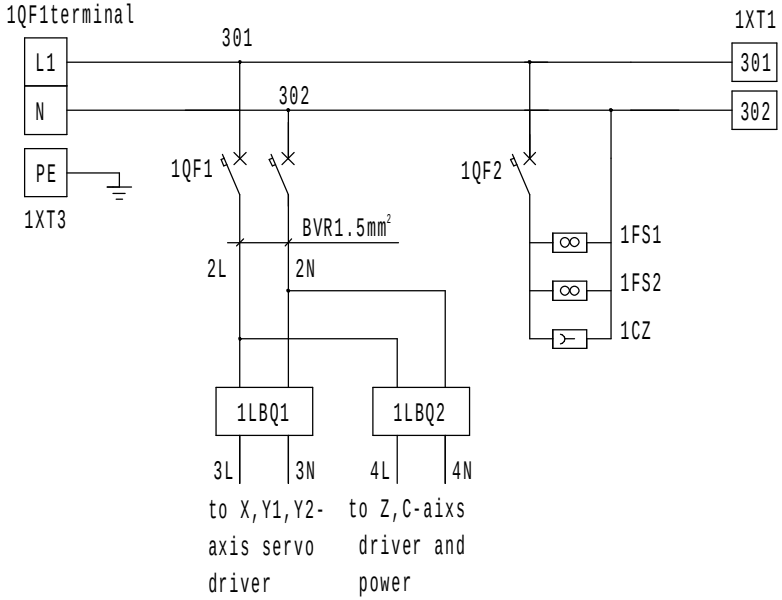

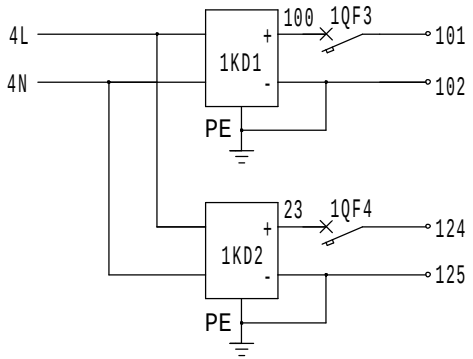

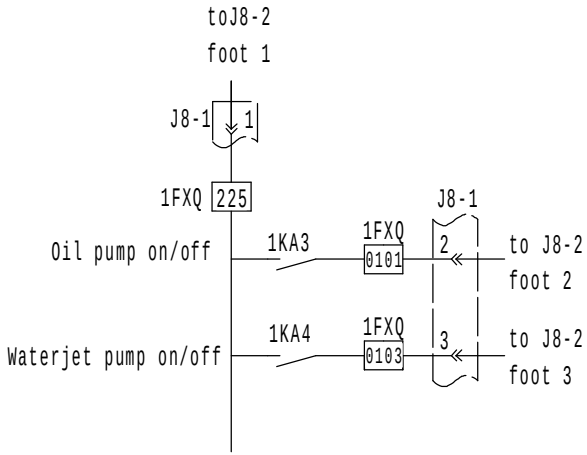

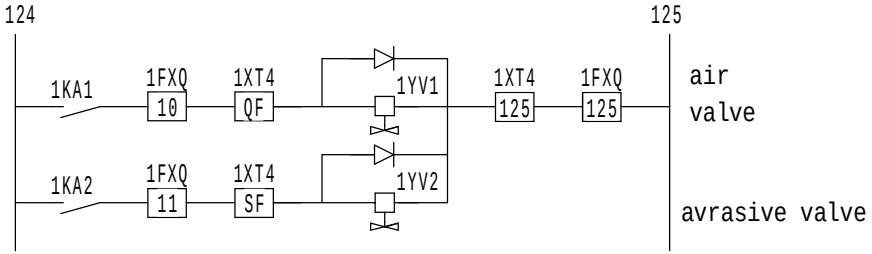

A&V ®			Table electric principle drawing			
				design mark	weight	ratio
						1:1
design		date		total page	page	
check		date	APW-SKTⅢ-1-1			