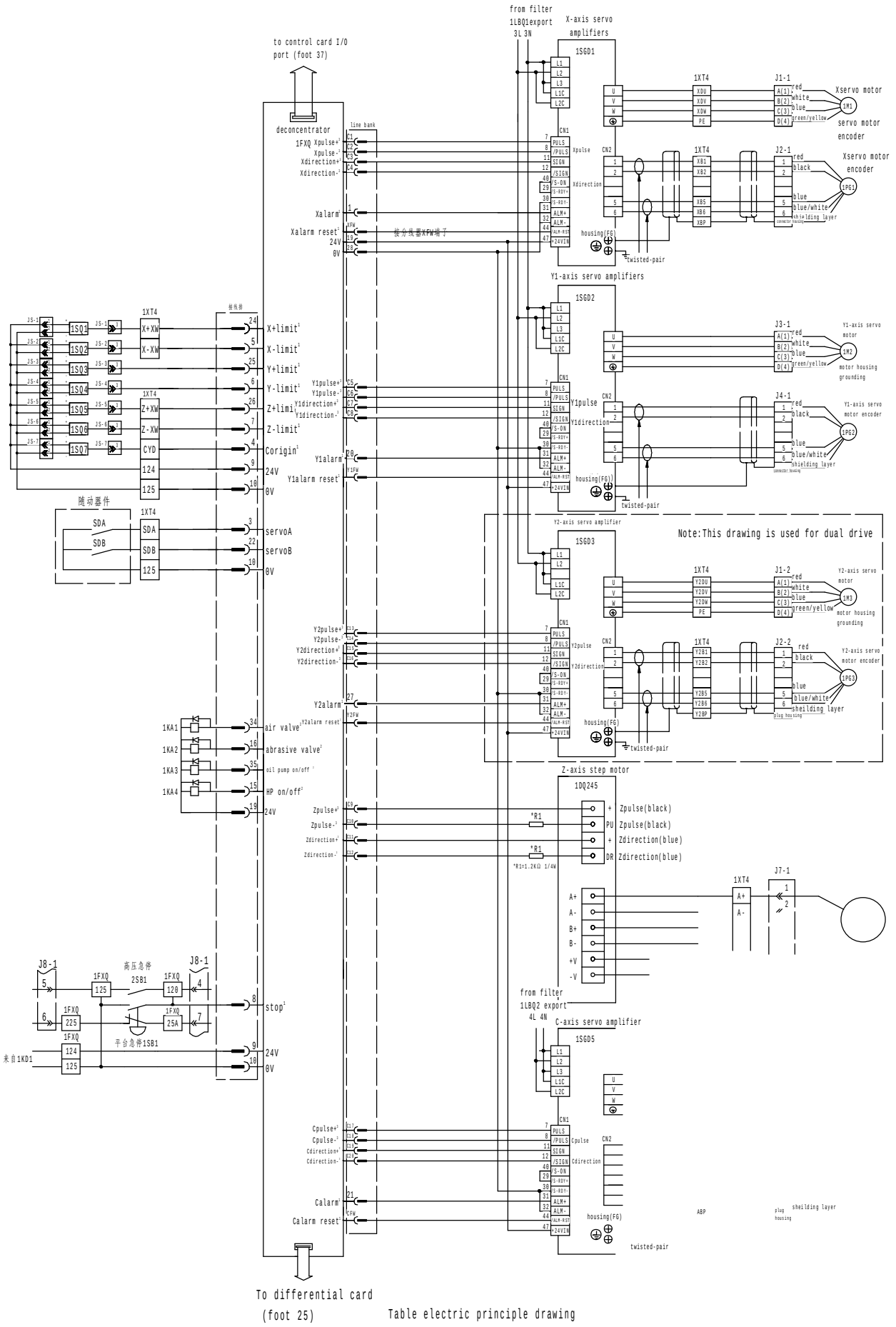

Table electric principle drawing

APW-SKTⅢ-1-2